KISTLER
measure. analyze. innovate.

Piezoelectric pressure sensor

Type 6239A...

Tangential shot shell pressure sensor

Charge output pressure sensor for ballistic measurements on shot shells. Type 6239A… is primarily used in a tangential mounting configuration directly touching the plastic cartridge. This setup eliminates the need for drilling each shot shell prior to the ballistic pressure measurement.

- Pressure range up to 1 500 bar
- Tangential pressure measurement; geometric compatibility with other sensors for this application
- Excellent linearity <0.5%
- High sensitivity –5.6 pC/bar
- Mounting thread options: 3/8-24 UNF or M10x1
- Optional dial gauge accessory for accurate distance adjustment in tangential mounting (patent pending)

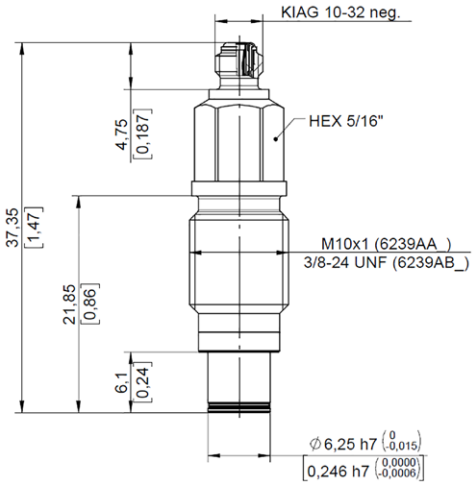

Description

Rugged design and robust crystal sensing elements ensure a long lifetime even under demanding operating conditions.

The sensing element is made of KI85 crystal, a Kistler proprietary material that offers a significantly higher sensitivity than a quartz element of the same dimension. Due to the excellent linearity of this sensor, it can be used to make very accurate measurements of very small pressures.

The special diaphragm design yields equal pressure values in tangential measurement configuration as compared to conventional pressure measurement (without drilling of shot shell).

Application

Pressure sensor Type 6239A… is suitable for tangential measurements in direct contact with the plastic surface of shotgun cartridges (see Fig. 1). This mounting configuration is also referred to as flush mount. Drilling of the shot shell is not necessary, since the sensor accurately measures pressure based on the expansion of the plastic cartridge. This is a common method for the qualification of shotgun ammunition.

Other conventional pressure measurement applications require the sensor to be installed in a recessed configuration (see Fig. 2).

Technical data

Range	bar	0 … 1 500
Calibrated partial range	bar	150
Overload	bar	2 000
Sensitivity	pC/bar	–5.6
Linearity	% FSP	≤±0.5
Hysteresis	% FSP	≤±0.5
Natural frequency [1]	kHz	>300
Rise time	µs	≤1
Acceleration sensitivity		
axial	bar/g	≤0.001
radial	bar/g	≤0.0005
Operating temperature range	°C	–40 … 160
Thermal sensitivity shift –40 … 160 °C	%	–2.5/4.5
Insulation resistance at 20 and 160 °C	Ω	$>10^{13}$
Connector	Type	10-32 UNF
Tightening torque	N·m	15
Weight	g	11
Measuring element	Material	KI85 crystal
Sensor body	Material	17-4 PH

[1] The natural frequency is calculated from the rise time.

6239A_003-360e-03.19

This information corresponds to the current state of knowledge. Kistler reserves the right to make technical changes. Liability for consequential damage resulting from the use of Kistler products is excluded.

© 2018 … 2019 Kistler Group, Eulachstrasse 22, 8408 Winterthur, Switzerland Tel. +41522241111, info@kistler.com, www.kistler.com. Kistler Group products are protected by various intellectual property rights. For more details visit www.kistler.com

KISTLER
measure. analyze. innovate.

Mounting

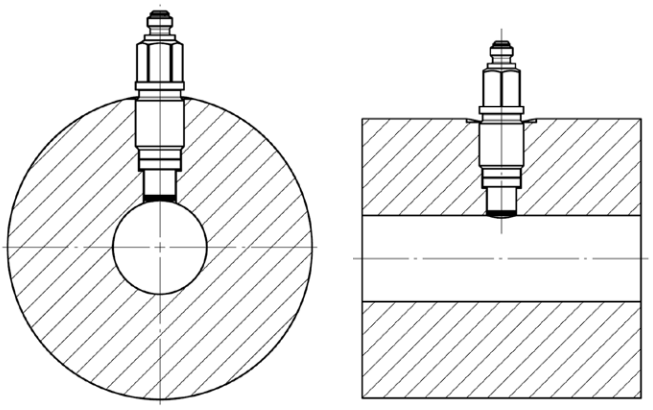

Fig. 1: Tangential/flush mounting configuration

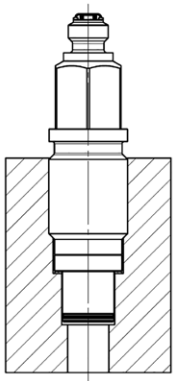

Fig. 2: Recessed mounting configuration

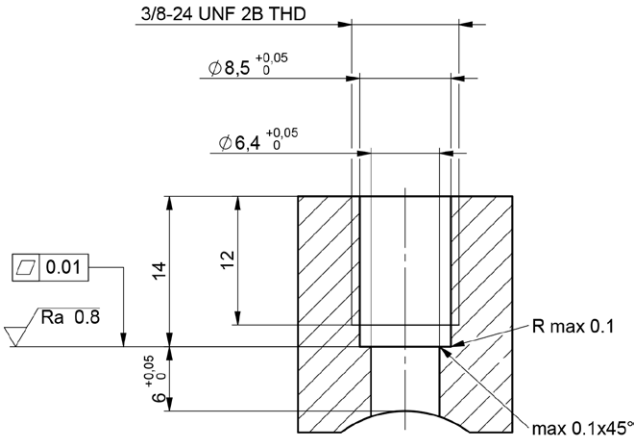

Fig. 3: Mounting bore dimensions for tangential/flush mounting of Type 6239ABA (3/8-24 UNF thread)

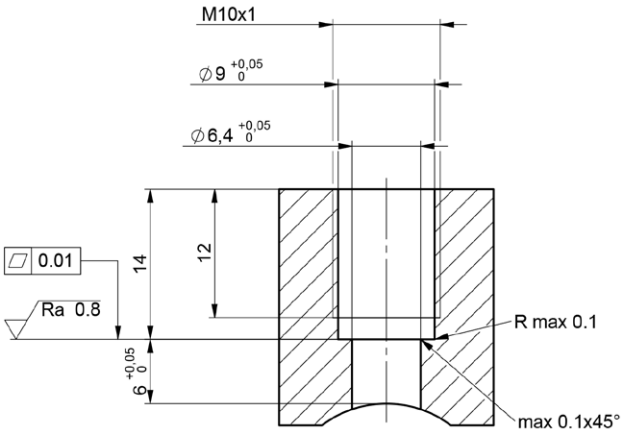

Fig. 4: Mounting bore dimensions for tangential / flush mounting of Type 6239AAA (M10x1 thread)

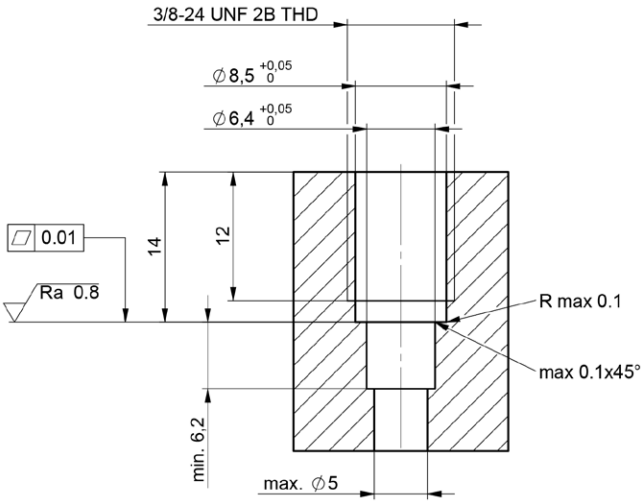

Fig. 5: Mounting bore dimensions for recessed mounting of Type 6239ABA (3/8-24 UNF thread)

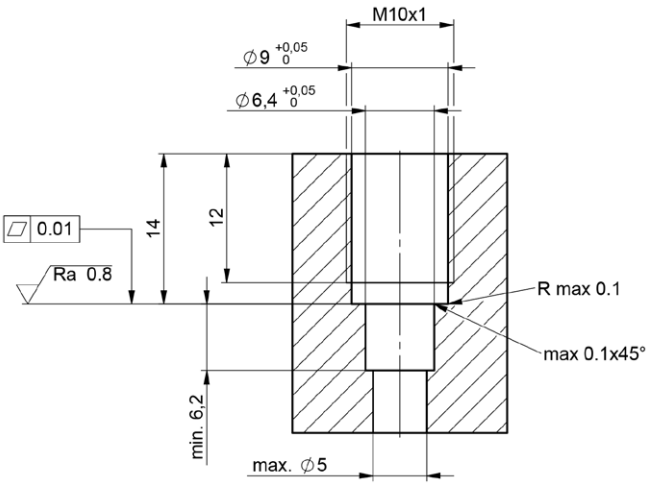

Fig. 6: Mounting bore dimensions for recessed mounting of Type 6239AAA (M10x1 thread)

This information corresponds to the current state of knowledge. Kistler reserves the right to make technical changes. Liability for consequential damage resulting from the use of Kistler products is excluded.

© 2018 ... 2019 Kistler Group, Eulachstrasse 22, 8408 Winterthur, Switzerland Tel. +41522241111, info@kistler.com, www.kistler.com. Kistler Group products are protected by various intellectual property rights. For more details visit www.kistler.com

KISTLER
measure. analyze. innovate.

Included accessories	Type/Mat. No.
• Sealing ring 0.50 mm (standard) 10x	1100A105
• Sealing ring 0.25 mm 10x	1100A101
• Lubrication grease	1063

Optional accessories	Type/Mat. No.
• Surface finishing tool M10x1	1300A46A1
• Surface finishing tool 3/8-24 UNF	1300A25A1
• Torque wrench	1371B
• Tubular socket wrench hex. 8mm	1373
• Connection cable (10-32 UNF pos. – 10-32 UNF neg.)	1699AA0,5
• Connection cable (10-32 UNF pos. – BNC pos.)	1631C…
• Dial gauge M10x1	1300A48A1
• Dial gauge 3/8-24 UNF	1300A48A2
• Dummy cartridge for dial gauge Caliber 12	1300A48Z1
• Dummy cartridge for dial gauge Caliber 16	1300A48Z2
• Dummy cartridge for dial gauge Caliber 20	1300A48Z3
• Dummy cartridge for dial gauge Caliber 28	1300A48Z4
• Dummy cartridge for dial gauge Caliber .410	1300A48Z5
• Calibration adapter M10x1 for pressure generator Type 6906	6923B3
• Calibration adapter 3/8-24 UNF for pressure generator Type 6906	6923B4

Ordering key

Type 6239A □□

M10x1 thread	**A**
3/8-24 UNF thread	**B**

Piezoelectric Pressure Sensor	**A**
Piezoelectric Pressure Sensor with additional accessories Types 1300A46A1/2, socket wrench and hex spanner	**B**

Ordering Example	Type
• Piezoelectric pressure sensor 3/8-24 UNF thread with additional accessories	6239ABB

6239A_003-360e-03.19

This information corresponds to the current state of knowledge. Kistler reserves the right to make technical changes. Liability for consequential damage resulting from the use of Kistler products is excluded.

© 2018 ... 2019 Kistler Group, Eulachstrasse 22, 8408 Winterthur, Switzerland Tel. +41522241111, info@kistler.com, www.kistler.com. Kistler Group products are protected by various intellectual property rights. For more details visit www.kistler.com